LD systems
free your sound

MAUI® P900

POWERED COLUMN SOUND SYSTEM

Design by
PORSCHE DESIGN
STUDIO

LD systems
free your sound

Design by
PORSCHE DESIGN
STUDIO

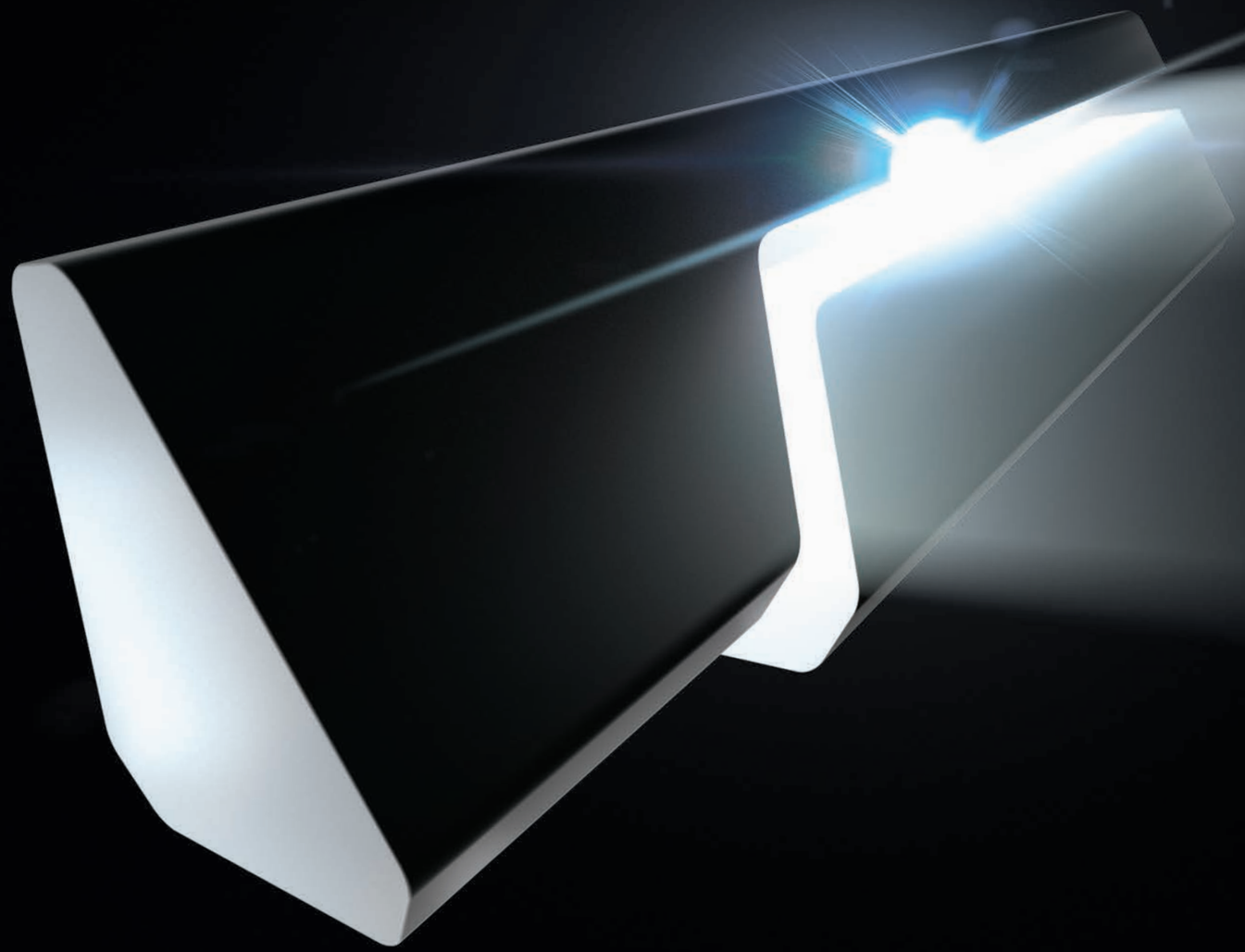

A groundbreaking vision

Imagine a modern art audio system. Imagine a solid block of aluminium, a laser-sharp diagonal cut.

Creating the MAUI® P900, we set out to turn our imagination into reality. We have combined state-of-the-art audio technology and sleek elegance into a loudspeaker system that breaks new ground. Merging inspired aesthetics with technical excellence, the MAUI® P900 is a vision come true.

The perfect symbiosis of form and function

With its smooth lines and advanced engineering, the MAUI® P900 brings sight and sound together. Rather than being an end in itself, the distinctive visual design serves the clear purpose of supporting and enhancing the system's functionality and audio performance. The perfect marriage of sonics and style, indeed.

Combining exclusive materials

A skillful blend of select materials emphasizes the MAUI® P900's integrated design approach. Providing high strength and superb corrosion resistance, the aluminium body is furnished with a grille of multilayer mesh. The elastic high-tech material is dirt-repellent, extremely hardwearing and allows sound waves to pass through without hindrance or colouration.

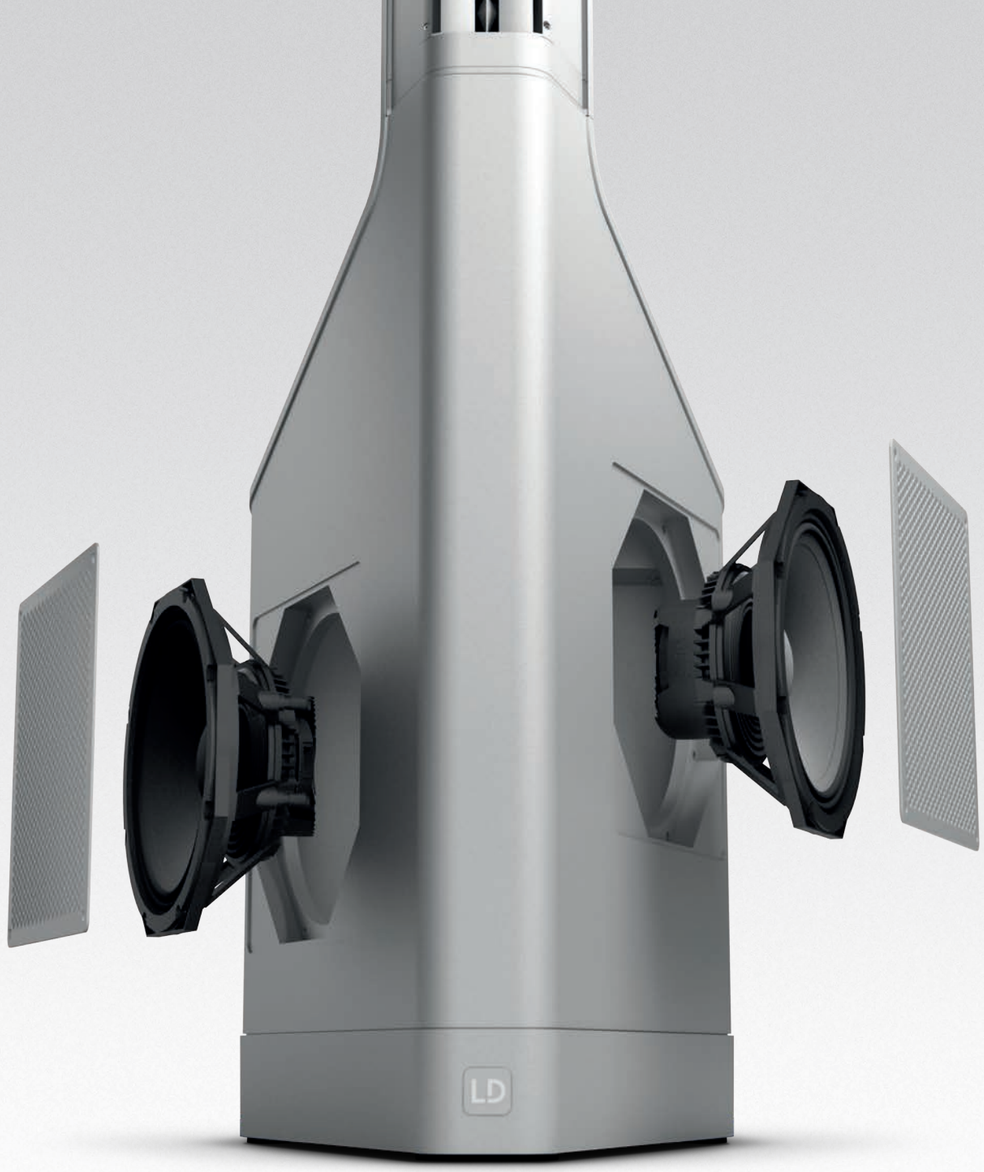

Unveiling new sonic sensations

Deep inside the MAUI® P900's streamlined contours, next generation Class D amplification and LD Systems®' DynX® DSP technology provide massive headroom, exceptional transient response and distortion-free performance. The result is a natural, dynamic sound that's so alive you can almost touch it.

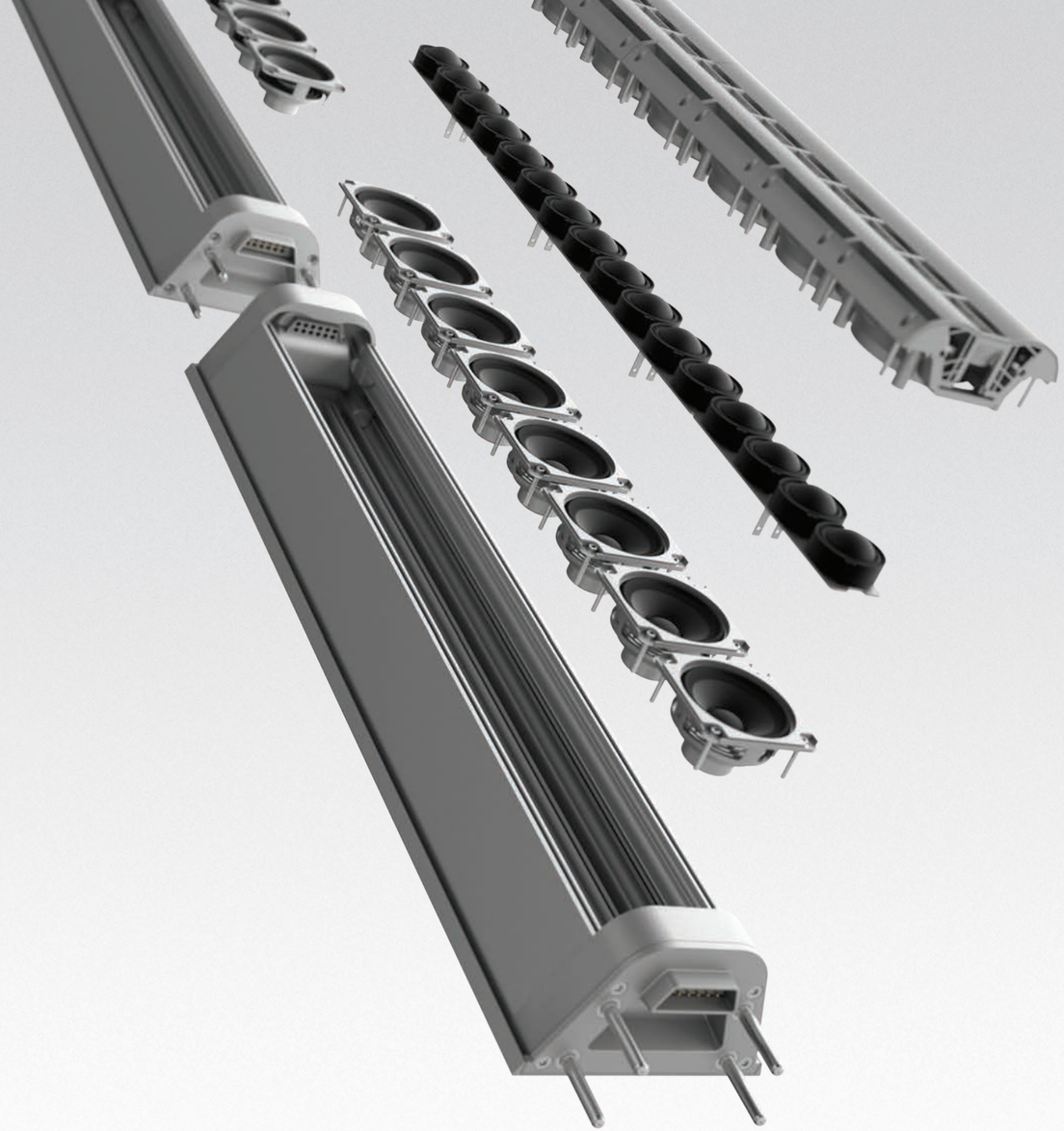

Delicate lightness with monumental clarity

From a subtle pianissimo to thundering high-energy crescendos, the MAUI® P900 delivers truly prodigious sound. Sporting a massive total of 50 premium transducers with neodymium motor structures, the system ensures immaculate audio reproduction with minute details and delicate nuances.

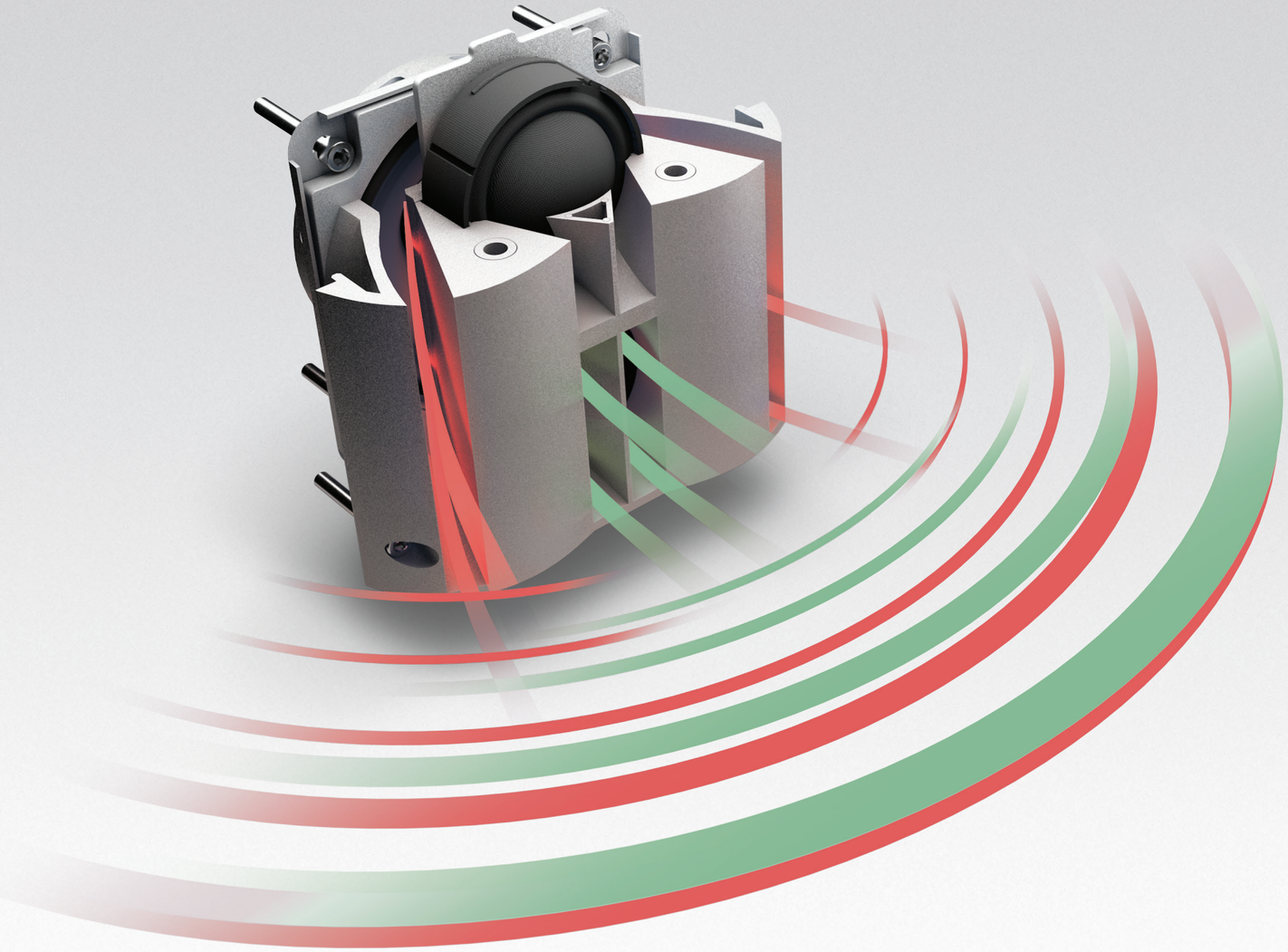

The art of sound shaping

Incorporating LD Systems® WaveAhead® tweeter arrangement technology, the innovative SonicGuide® plays a major role in the MAUI® P900's outstanding audio performance. The patented design merges the midrange and high frequency transducers' signals to a coherent plane wavefront that is perfectly phase and time aligned.

Daring simplicity

Setting up and operating the MAUI® P900 is as simple as it gets and requires no expert knowledge. Featuring the essential connectors and controls only and plug-and-play convenience, the system is ready to perform its audio magic in no time.

The MAUI® P900 also supports the advanced AAC and aptX™ codecs to ensure superb audio quality over Bluetooth® up to a 70-meter range (230 ft.).

Stereo is in the air

Completely eliminating the need for signal cables, TrueWireless Stereo™ technology enables easy stereo pairing of Bluetooth® source devices and two MAUI® P900 systems to create a wireless left and right channel stereo setup with up to 15 m (50 ft.) distance between systems.

Award Winning Design

The LD Systems® MAUI® P900 has already received prestigious awards and public praise for its unique combination of state-of-the-art technology and a distinctive iconic design.

iF DESIGN AWARD WINNER | GERMAN DESIGN AWARD WINNER | reddot award winner

Beauty that radiates from the inside out

Max. SPL (continuous / peak):	121 dB / 131 dB
Signal/noise ratio:	106 dB
System power (RMS / peak):	1400 W / 2800 W
Frequency response:	42 - 20,000 Hz
Max. dispersion (H x V):	140° x 15°
HF transducers:	32 x 1" custom-made neodymium
HF transducers voice coil:	1"
MF transducers:	16 x 2.8" custom-made neodymium
MF transducers voice coil:	0.75"
LF transducers:	2 x 10" custom-made neodymium
LF transducers voice coil:	3"
Waveguide:	Patented SonicGuide® technology
MF / HF transducer arrangement:	Patented WaveAhead® technology
Amplification module:	3-way Class D
DSP characteristics:	Bit depth AD/DA converter: 24 bit / Internal sampling frequency: 48 kHz / Signal/noise ratio: 106 dB
Line inputs:	1x Stereo (Neutrik XLR)
Line outputs:	1x Stereo Thru (Neutrik XLR)
Bluetooth audio decoder:	aptX, AAC, SBC
Controls:	Sub level, Main Level, Bluetooth HOLD TO LINK button, Bluetooth STEREO LINK button, Power
Indicators:	Power, Signal, Limit, Protect, Bluetooth, Bluetooth STEREO LINK
Operating voltage:	Switching Power Supply, 100 V AC - 120 V AC, 50 - 60 Hz, 200 V AC - 240 V AC, 50 - 60 Hz (automatic conversion)
Cabinet construction:	Vented
Cabinet material / surface:	15 mm plywood / HD coated aluminum, multi layer mesh (cloth)
Weight:	46 kg
Features:	DSP-based signal processing, Excellent sound dispersion, Bluetooth audio streaming, Mono/ Stereo application

Make it your statement of style

Make a strong statement of sophisticated style and set yourself apart. The MAUI® P900 is available in Graphite Black, Platinum Grey or Cocoon White to discreetly fit into your ambience and decor.

MKBP900LD

LD systems
free your sound

MAUI® P900

POWERED COLUMN SOUND SYSTEM

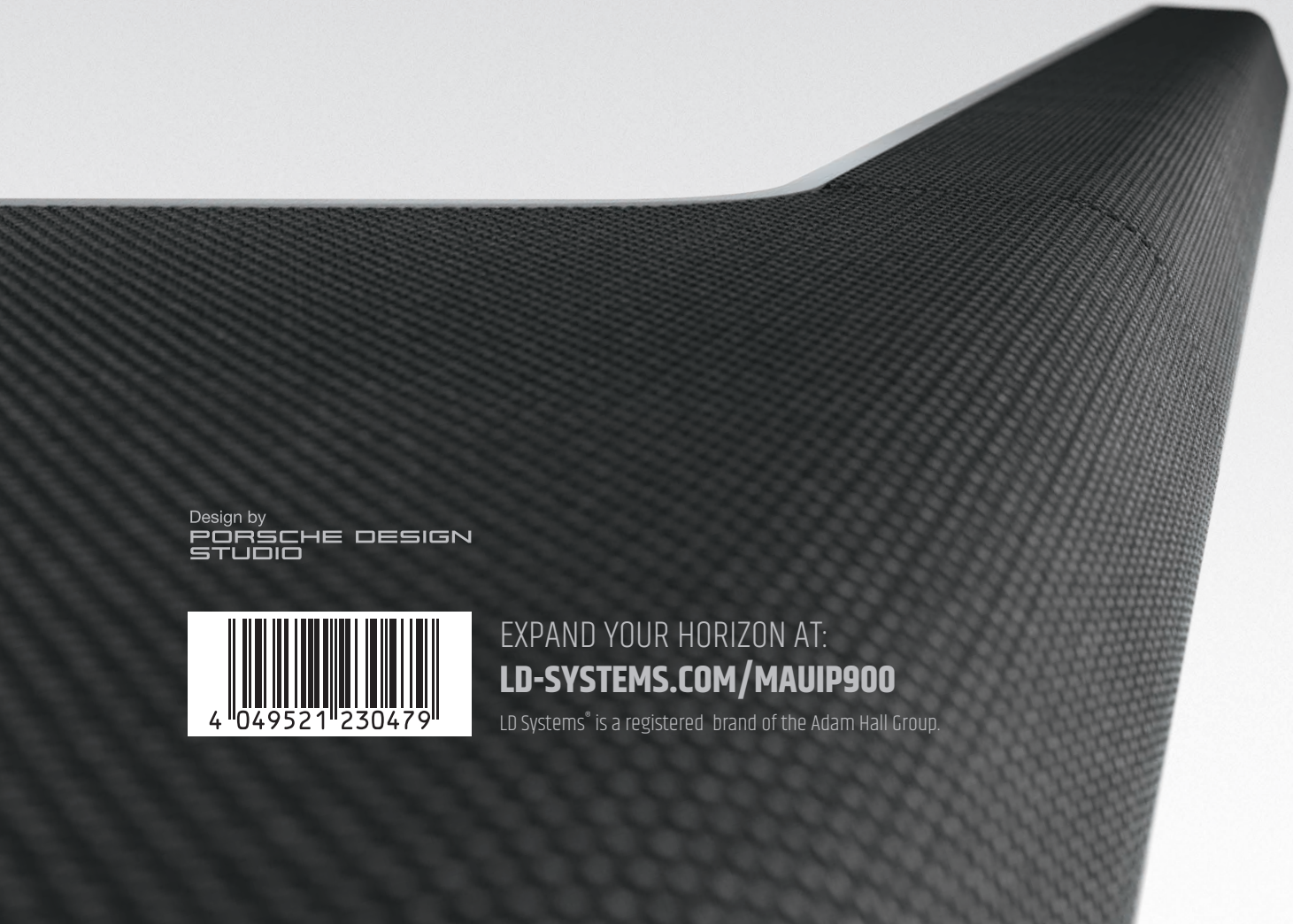

Design by
PORSCHE DESIGN
STUDIO

4 049521 230479

EXPAND YOUR HORIZON AT:

LD-SYSTEMS.COM/MAUIP900

LD Systems® is a registered brand of the Adam Hall Group.